DOUG THORLEY HEADERS

BY SUMMIT INDUSTRIES

THY-114Y / THY-114Y-S

DODGE 318-360
72-87 PICKUP, RAMCHARGER

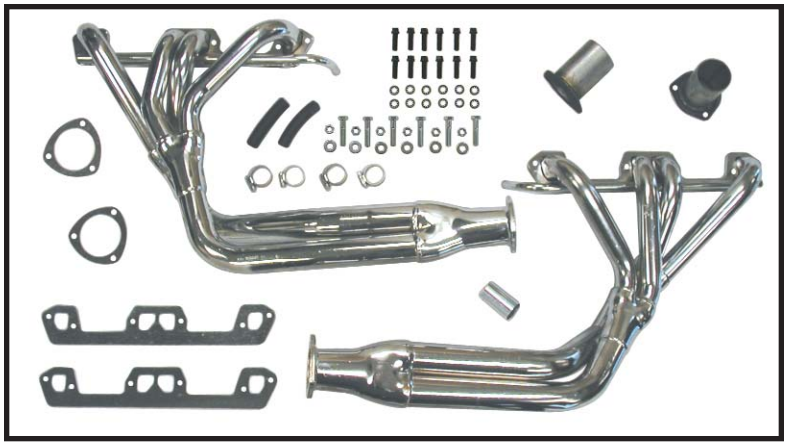

PARTS INCLUDED

1 - Right side header
1 - Left side header
1 - Hot air pickup
2 - Reducers
2 - Header gaskets
2 - Collector gaskets

HARDWARE INCLUDED

12 - 5/16”-18 x 1” Header bolts
12 - 5/16” Star lock washers
6 - 3/8”-16 x 1-1/4” Hex head bolts
6 - 3/8”-16 Hex nuts
6 - 3/8” Flat washers
2 - 5/8” x 4” Hoses (THY-114Y-S only)
4 - Hose clamps (THY-114Y-S only)

TOOLS REQUIRED

Heating torch
Mig welder
Cut-off saw
Sawzall
3/8", 7/16", 9/16", 1/2", 3/4", 7/8" Wrenches
10mm, 13mm Wrenches
9/16" Line (flare nut) wrench
5/16", 7/16", 1/2", 9/16" Sockets
3/8", 7/16" Deep sockets
15mm Deep socket
5/8" Spark plug socket
Ratchet and extensions
Pliers
Crescent wrench
Torque wrench
Rust penetrant
High-temp sensor-safe silicon sealer (rated at 600 degrees+)

WARRANTY NOTES

1) The utmost care is taken at Thorley Headers to maintain the highest standards of quality. However, Thorley Headers cannot control the installation of the product. For this reason, the Thorley Headers warranty covers only the replacement of the components - not the labor for the installation.

2) The use of any type of “header wrapping” voids the warranty. Using any sort of wrapping material on the headers destroys the tubing’s ability to dissipate heat, causing very rapid deterioration of the metal and the subsequent failure of the headers.

3) The chrome plating applied to all Thorley headers is a high-nickel chrome finish applied to retard corrosion. This is a “heat” chrome to preserve the metal. This finish is not “show chrome” intended for the sake of appearance. This high-nickel chrome turns colors and approaches black as it cooks into the metal. The brilliance of the chrome finish is not covered under the warranty. Contamination of the surface by foreign substances may produce other color patterns. This can be prevented by routine cleaning.

WARRANTY NOTES

4) Retain all paperwork pertaining to the purchase of your Thorley product. Save your receipt! **Your limited warranty is not valid without a receipt of purchase.**

LEGALITY NOTE

The installation of headers onto any vehicle must be performed in accordance with all governmental regulations that might pertain to the particular vehicle receiving the headers. Please call your Thorley Headers distributor if there are any questions regarding the legality of the installation. This part number is considered a legal replacement part on vehicles that do not have a catalytic converter, as long as all original emission control devices are connected and functioning properly. As a result, **this part number does not require an Executive Order ("E.O.") number.**

INSTALLATION NOTES

1) It is important that you read the entire instruction sheet before initiating any installation.

2) Thorley headers are designed to fit only factory installed engine and transmission combinations. We cannot guarantee that Thorley headers will fit in the case of "engine swaps" or "transmission swaps".

3) Due to restricted room in the engine compartment, your headers may come close to certain body and chassis components. This is normal for an installation of this type. However, a careful inspection must be completed to insure that the distances and placement are reasonable and logical, especially with regard to electrical, fuel, and brake components.

4) Because of the requirement to raise the engine to facillitate header installation, the engine mounts should be carefully inspected at that point of the installation. It is highly recommended that questionable or deteriorated engine mounts be replaced during the installation of the headers. In some cases, the engine mounts need to be loosened and repositioned to provide optimum header clearance from some components.

5) Because of car-to-car variations, Thorley Headers strongly recommends that these headers be installed by a competent exhaust shop that has welding and fabrication capabilities.

INSTALLATION PROCEDURES

WARNING! - Do not rely on bumper jacks or chassis jacks for support during header installation. The subject vehicle should be raised and supported with jacking equipment and jackstands or ramps intended for undercarriage auto maintenance. It is extremely dangerous to work under an improperly raised and/or supported vehicle.

WARNING! - Make certain there is ample clearance around components such as brake lines, brake proportioning valves, fuel lines, hoses and pumps, and electrical components and wires. In some cases it may be necessary to relocate items that may be adversely affected by exhaust system heat.

NOTE: These procedures are documented on factory standard-equipped vehicles with original configuration compliance. Any modification of the subject vehicle may dictate modification to

1) Disconnect the battery.

2) Raise the vehicle at least 24 inches and support it with jack stands or other suitable supports. (**WARNING!** - Do not rely on bumper jacks or chassis jacks for support during header installation. The subject vehicle should be raised and supported with jacking equipment and jackstands or ramps intended for undercarriage auto maintenance. It is extremely dangerous to work under an improperly raised and/or supported vehicle.)

3) Remove the spark plugs, oil filter, and starter.

4) Remove the stock exhaust manifolds and head pipes. (Note: When removing the stock cast iron manifolds, it is recommended that the front and rear studs be left in the head. These pass through the water jacket, and if removed will require sealant when reinstalled. However, enough header bolts are supplied to replace the studs should the studs be unusable.)

5) For vehicles equipped with air injection (THY-114Y-S), the following modifications will be necessary. Remove the air injection tube from the engine. Cut in two places as shown in Illustrations, Figure 1. De-burr both the inside and outside of the tubing and remove any chips. Reinstall the air injection tube on the engine. Slip supplied 5/8” x 4” hoses approximately two inches over the cut tubing and secure them using the supplied hose clamps.

6) Clean all traces of carbon deposits from the cylinder head exhaust port surfaces.

7) On 4WD models, it may be necessary to drop the front driveshaft at this point.

8) (Note: The use of high-temp sensor-safe silicon sealer between the header flange and header gasket is highly recommended.) Install the driver side header and supplied header gasket from below the vehicle using the supplied 5/16”-18 x 1” header bolts and star lock washers. Do not fully tighten at this time.

9) Reinstall the starter and starter wiring.

10) Starting in the center of the header flange and working toward the ends, tighten all header bolts to 35 ft/lbs.

11) Repeat Steps 7 and 9 for the passenger side.

12) Reinstall the oil filter and spark plugs.

13) If applicable, reinstall the front driveshaft.

14) Attach the supplied reducers to the header collectors using the supplied collector gaskets, 3/8”-16 x 1-1/4” hex head bolts, hex nuts, and washers.

15) Weld the reducers to the stock head pipes.

16) If applicable, clamp the hoses installed on the air injection tube in Step 5 to the headers using the supplied hose clamps.

17) Reconnect the battery. Start the engine and check for leaks.

18) Because the header bolts will initially stretch when hot, we recommend adhering to the following steps:

    a) Retighten the header bolts to 35 ft/lbs after approximately twenty minutes of operation. (Note: Remember the engine will be hot at this time. Protect yourself accordingly.)
    b) Check and retighten the header bolts to 35 ft/lbs after the first month of operation.

DODGE 318-360
72-87 PICKUP, RAMCHARGER

ILLUSTRATIONS

FIGURE 1

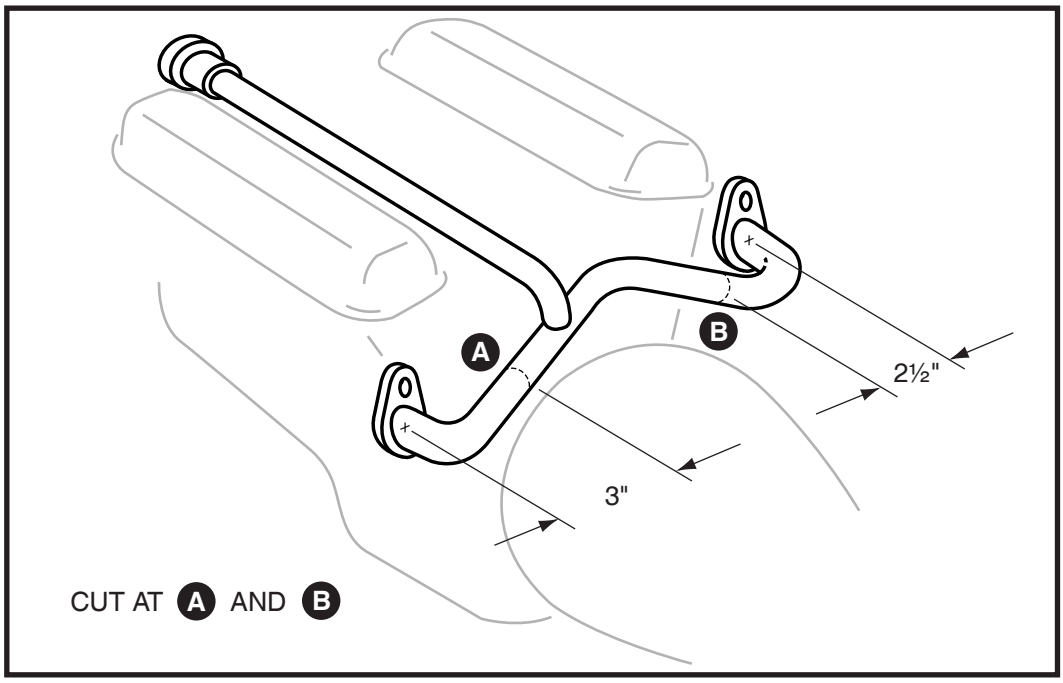

Heat Riser Information

What is a heat riser?

The heat riser is a valve that closes off the exhaust on one bank of a V8's cylinders when the engine is cold. This routes the hot exhaust gases from the closed-off bank through the exhaust cross-over at the center of the intake manifold, and out through the exhaust manifold on the "open" side. The exhaust heat helps the gasoline in the cold intake manifold reach evaporation temperature more quickly, eliminating "puddling" of raw gasoline in the intake manifold and making the vehicle much more driveable when it is cold. As the engine warms up, the valve opens, allowing the exhaust to flow out through both headers.

What is an "E.F.E. valve"?

"E.F.E." stands for Early Fuel Evaporation, and "E.F.E. valve" is often considered to be another name for the heat riser. However, some vehicles have what is referred to as an "E.F.E. *system*". An E.F.E. system might include both a heat riser in the exhaust manifold, and a hot air pickup that draws the engine's intake air across one of the exhaust manifolds to preheat it during cold start conditions. Whatever combination your vehicle came equipped with in its stock configuration is what must be reinstalled and reconnected when Thorley headers are installed in order for your vehicle to be smog legal. If in doubt, consult your new-car dealership parts department or an authorized smog inspection/maintenance station.

What controls the operation of the heat riser?

There are two types of heat risers: mechanical and vacuum. The mechanical types use a bi-metallic strip which works like a heat-sensitive spring, opening the valve when it gets hot enough. The vacuum type uses a vacuum canister similar to the vacuum advance on an ignition distributor. Vacuum routed through a heat-sensitive switch (usually monitoring engine coolant temperature) pulls the valve closed when the engine is cold, and then allows it to open by shutting off the vacuum supply when normal operating temperature is reached.
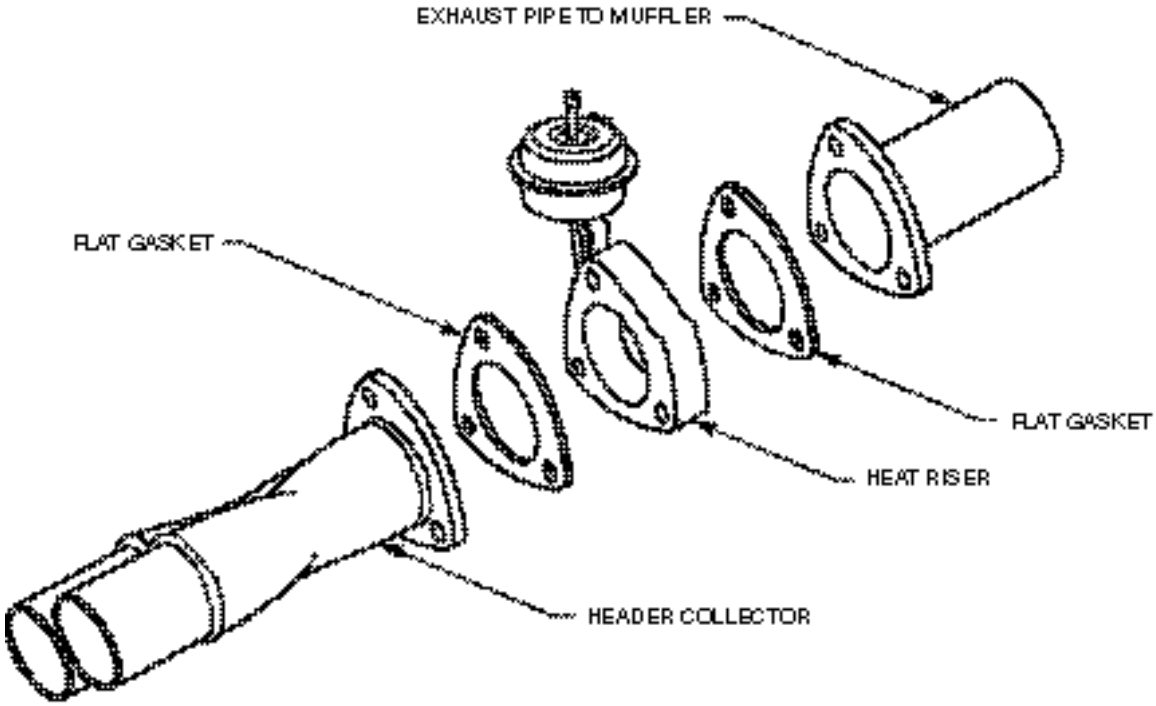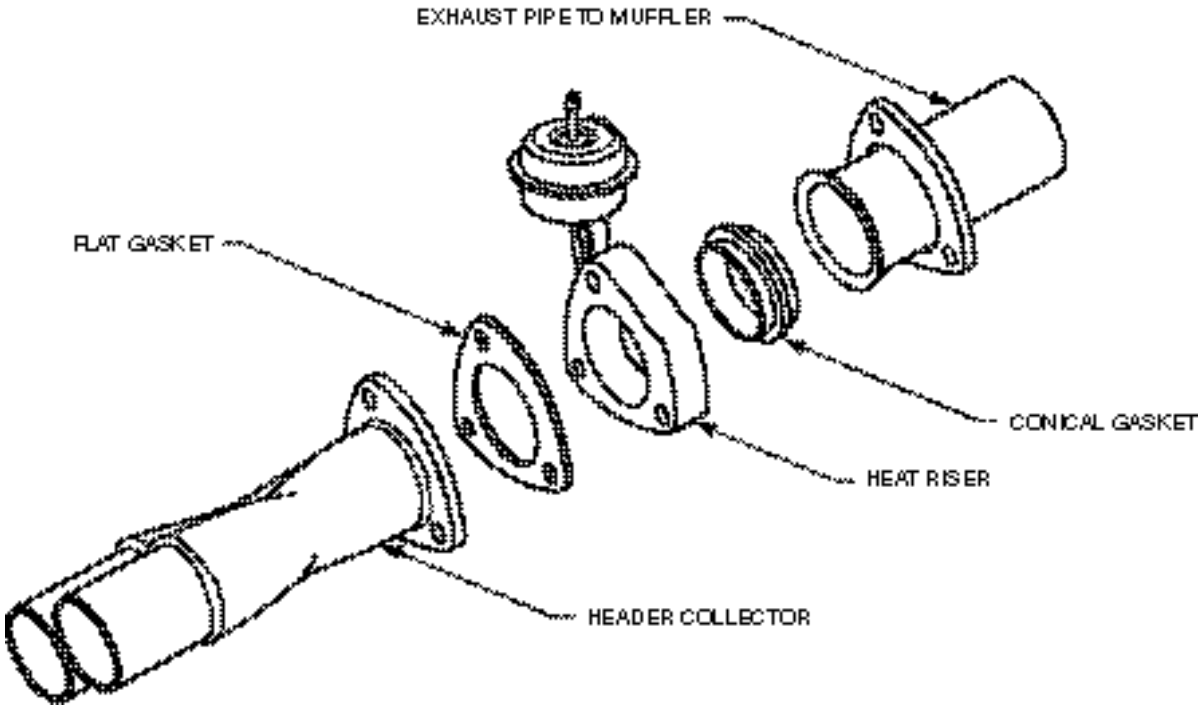
Heat Riser Installation Variations